EKI-1521/CI/I
EKI-1522/CI/I
EKI-1524/CI/I

1-port RS-232/422/485 Serial Device Server

2-port RS-232/422/485 Serial Device Server

4-port RS-232/422/485 Serial Device Server

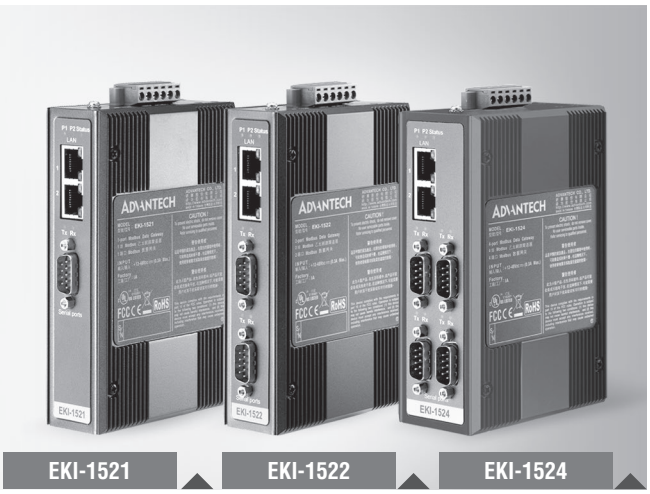

Features

- Provides 2 x 10/100 Mbps Ethernet ports for LAN redundancy
- Provides COM port redirection (Virtual COM), TCP and UDP operation modes
- Supports up to 921.6 kbps, and any baud rate setting
- Allows a max. of 5 hosts to access one serial port
- Allows a max. of 16 hosts to be accessed as TCP client mode
- Built-in 15 KV ESD protection for all serial signals
- Provides multiple configuration methods including Windows utility, Telnet console, and Web Browser
- Supports 32-bit/64-bit Windows 2000/XP/Vista/7/8/8.1, Windows Server 2003/2008/2012, Windows CE 5.0, and Linux
- Automatic RS-485 data flow control
- Supports surge protection for D.C. power ports with line to line 2 KV, and line to earth 4 KV; for signal ports with 4 KV.
- 'I' models support a wide operating temperature
- 'CI' models support isolation and wide operating temperature

Introduction

EKI-1521, EKI-1522 and EKI-1524 feature two independent Ethernet ports and MAC addresses to provide a redundant network mechanism to guarantee Ethernet network reliability. EKI-1521, EKI-1522 and EKI-1524 are serial device servers that connect RS-232/422/485 serial devices, such as PLC, meters, sensors, and barcode reader to an IP-based Ethernet LAN. They allow nearly any device with serial ports to connect and share an Ethernet network. EKI-1521, EKI-1522 and EKI-1524 provide various operations: COM port redirection (Virtual COMport), TCP Server, TCP Client and UDP mode. With COM port redirection mode, standard serial operation calls are transparently redirected to the EKI-1521, EKI-1522 and EKI-1524, guaranteeing compatibility with legacy serial devices and enabling backward compatibility with existing software. With TCP server, TCP client, and UDP modes, EKI-1521, EKI-1522 and EKI-1524 ensure the compatibility of network software that uses a standard network API. Moreover, you can make serial devices communicate with other devices peer-to-peer, without any intermediate host PCs and software programming.

Specifications

Ethernet Communications

- **Compatibility** IEEE 802.3, IEEE 802.3u
- **Speed** 10/100 Mbps
- **No. of Ports** 2
- **Port Connector** 8-pin RJ45
- **Protection** Built-in 1.5 KV magnetic isolation

Serial Communications

- **Port Type** RS-232/422/485, software selectable
- **No. of Ports** EKI-1521: 1/EKI-1522: 2/EKI-1524: 4
- **Port Connector** DB9 male
- **Data Bits** 5, 6, 7, 8
- **Stop Bits** 1, 1.5, 2
- **Parity** None, Odd, Even, Space, Mark
- **Flow Control** XON/XOFF, RTS/CTS, DTR/DSR
- **Baud Rate** 50 bps ~ 921.6 kbps, any baud rate setting
- **Serial Signals** RS-232: TxD, RxD, CTS, RTS, DTR, DSR, DCD, RI, GND
  RS-422: TxD+, TxD-, RxD+, RxD-, GND
  RS-485: Data+, Data-, GND
- **Protection** Built-in 15 KV ESD for all signals
  'CI' models: 2KV Isolation for RS-422/485 signals

Software

- **OS Support** 32-bit/64-bit Windows XP/Vista/7/8/8.1, Windows Server 2003/2008/2008 R2/2012/2012 R2, Windows CE 5.0, and Linux
- **Utility Software** Advantech EKI Device Configuration Utility
- **Operation Modes** COM port redirection mode (Virtual COM)
  TCP/UDP server (polling) mode
  TCP/UDP client (event handling) mode
  Pair connection (peer to peer) mode
- **Configuration** Windows utility, Telnet console, Web Browser
- **Management** SNMP MIB-II

Mechanics

- **Dimensions (W x H x D)** 36.6 x 140 x 95 mm (1.44" x 5.51" x 3.74")
  EKI-1524: 48.6 x 140 x 95 mm (1.91" x 5.51" x 3.74")
- **Enclosure** Metal with solid mounting hardware
- **Mounting** DIN-rail, Wall
- **Weight** EKI-1521: 612g/EKI-1522: 620g/EKI-1524: 690g

General

- **LED Indicators** System: Power, System Status/LAN: Speed, Link/Active
  Serial: Tx, Rx

Power Requirements

- **Input** 12 ~ 48 V_{DC}, redundant dual inputs
- **Connector** Terminal block
- **Consumption** EKI-1521: 5.2 W
  EKI-1522: 5.2 W
  EKI-1524: 6.3 W

Environment

- **Operating Temperature** EKI-1521/EKI-1522/EKI-1524: -10 ~ 60°C (14 ~ 140°F)
  'CI & I' models: -40 ~ 70°C (-40 ~ 158°F)
- **Storage Temperature** -40 ~ 85°C (-40 ~ 185°F)
- **Operating Humidity** 5 ~ 95% RH

Regulatory Approvals

- **EMC** CE, FCC Part 15 Subpart B (Class A)

Vertrieb durch AMC

AMC – Analytik & Messtechnik GmbH Chemnitz

Heinrich-Lorenz-Str. 55 Tel.: +49/371/38388-0
09120 Chemnitz Fax: +49/371/38388-99
E-Mail: info@amc-systeme.de Web: www.amc-systeme.de

ADVANTECH iAutomation Premier Partner

Last updated : 5-May-2015

Vertrieb durch

AMC – Analytik & Messtechnik GmbH Chemnitz

Heinrich-Lorenz-Str. 55 Tel.: +49/371/38388-0
09120 Chemnitz Fax: +49/371/38388-99
E-Mail: info@amc-systeme.de Web: www.amc-systeme.de

EKI-1521/CI/I
EKI-1522/CI/I
EKI-1524/CI/I

Dimensions

Unit: mm [inch]

EKI-1521

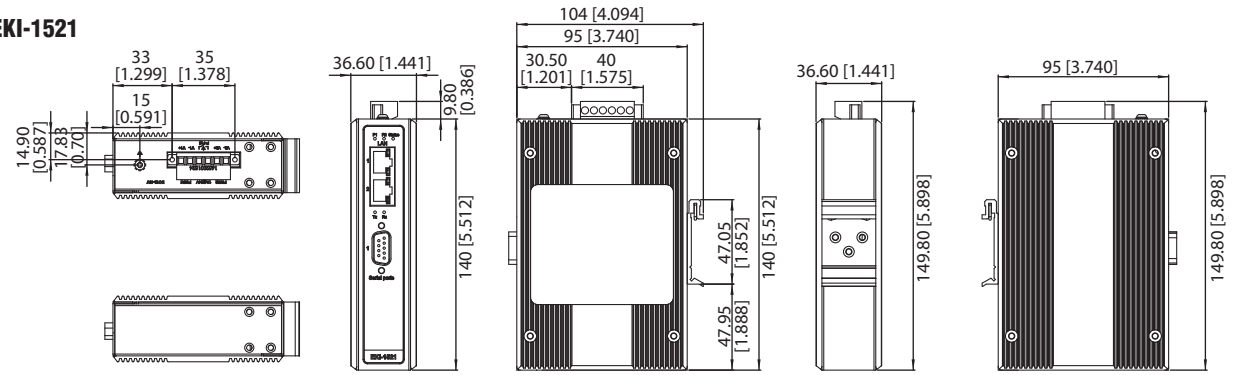

EKI-1522

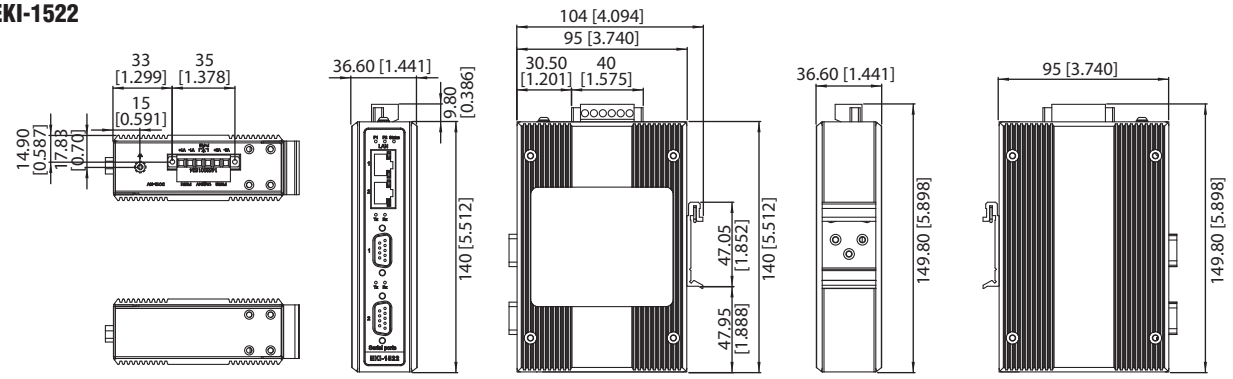

EKI-1524

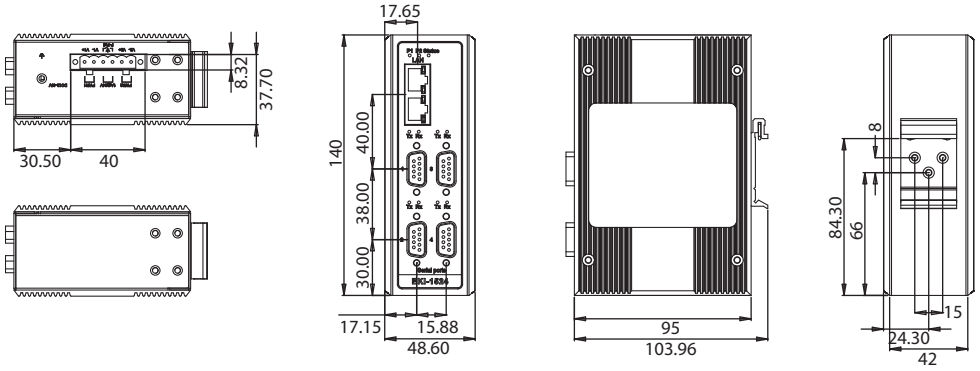

Panel Cut-out Dimensions: 104 x 140 x 36.6 mm (4.094" x 5.512" x 1.441")

Ordering Information

- **EKI-1521** 1-port RS-232/422/485 Serial Device Server
- **EKI-1522** 2-port RS-232/422/485 Serial Device Server
- **EKI-1524** 4-port RS-232/422/485 Serial Device Server
- **EKI-1521I** 1-port RS-232/422/485 Serial Device Server with wide operating temperature
- **EKI-1522I** 2-port RS-232/422/485 Serial Device Server with wide operating temperature
- **EKI-1524I** 4-port RS-232/422/485 Serial Device Server with wide operating temperature
- **EKI-1521CI** 1-port RS-422/485 Serial Device Server with wide operation temperature and isolation
- **EKI-1522CI** 2-port RS-422/485 Serial Device Server with wide operation temperature and isolation
- **EKI-1524CI** 4-port RS-422/485 Serial Device Server with wide operation temperature and isolation
- **OPT1-DB9** D-Sub9 to Terminal Converter

Irrtum und Änderungen vorbehalten – auch ohne vorherige Ankündigung. Verwendete Hardware- und Softwarebezeichnungen, Marken sowie Firmennamen können eingetragene Warenzeichen sein und unterliegen somit den gesetzlichen Bestimmungen. / Information in this document is subject to change without prior notice. The software and hardware designations or brand names used in this text are in most cases trademarks or registered trademarks of their respective companies and are thus subject to law.