PCE-5128

LGA1150 Intel® Core™i7/i5/i3/Pentium® SHB DDR3/SATA 3.0/USB3.0/Dual GbE/ 3 Displays

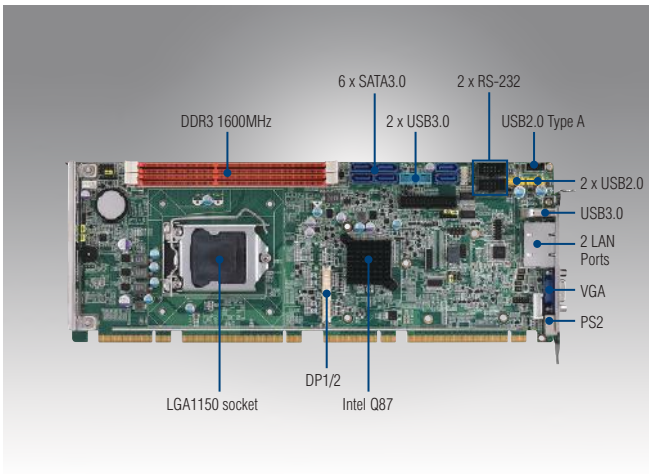

Features

- Supports Intel® Core™ i7/i5/i3 LGA1150 processors with Q87
- Dual Channel (Non-ECC) DDR3 1333/1600 up to 16 GB
- Supports PCIE 3.0, USB 3.0, SATA3.0, SW Raid 0, 1, 5, 10
- Supports CRT and 2 x DP/DVI-D (optional) display
- Supports out-of-band remote management with AMT9.0
- Supports Advantech TPM module (LPC I/O)
- Supports SUSIAccess and Embedded Software APIs

Ihr NI-Partner: AMC
AMC – Analytik & Messtechnik GmbH Chemnitz
Heinrich-Lorenz-Str. 55 Tel.: +49/371/38388-0
09120 Chemnitz Fax: +49/371/38388-99
E-Mail: info@amc-systeme.de Web: www.amc-systeme.de

Quiet

CE FCC

Specifications

Processor System	**Haswell refresh CPUs are supported from BIOS V2.xx**								
	CPU	i7-4790S	i5-4590S	i5-4590T	i3-4360	i3-4350T	i3-4340TE		
	Base Frequency	3.2GHz	3.0GHz	2.0GHZ	3.7GHz	3.1GHz	2.6GHz		
	L3 Cache	8MB	6MB	6MB	4MB	4MB	4MB		
	Haswell CPUs are supported by both BIOS V1.xx and V2.xx								
	CPU	i7-4770S	i7-4770TE	i5-4570S	i5-4570TE	i3-4330	i3-4330TE	G3420	G3320TE
	Base Frequency	3.1GHz	2.3GHz	2.9GHz	2.7GHz	3.5GHz	2.4GHz	3.2GHz	2.3GHz
	L3 Cache	8MB	8M	6MB	4MB	3MB	3MB	3MB	3MB
	SKU/Chipset	Intel Q87							
	BIOS	AMI 128Mbit SPI Flash							
Bus	PCI-Express	One x16 plus four x1 to backplane							
	PCI	Four 32-bit 33 MHz PCI Masters to backplane							
Memory	Technology	Dual channel (Non-ECC) DDR3 1333/1600 UDIMM							
	Max. Cap.	16 GB (8 GB per DIMM)							
	Socket	DDR3 240-pin DIMM x 2							
Graphics	Controller	Chipset integrated Intel HD Graphics							
	VRAM	Shared system memory is subject to OS							
	CRT	Supports resolution up to 1920 x 2000 pixel at 60Hz							
	DVI-D	Supports resolution up to 1920 x 1200 pixel at 60Hz							
	Triple Display	CRT+DP/DVI-D+DP/DVI-D							
Ethernet	Interface	10/100/1000 Mbps							
	Controller	LAN 1: Intel I217LM LAN 2: Intel I211AT							
	Connector with LED	RJ-45 x 2							
SATA	S/W Raid 0, 1, 5, 10	SATA 3.0 x 6 (600 MB/sec)							
Rear I/O	USB 3.0	1							
	Ethernet	2							
	VGA	1							
	PS/2	1 (PS/2 Y cable supports 1 x keyboard and 1 x mouse)							
Internal Connector	USB	Night USB2.0 (Pin-header*4+USB Type A*1+ 4 on backplane); Two USB3.0 (Pin header)							
	SATA	6							
	DP/DVI-D	2 (Pin header)							
	COM	2							
	IrDA	1							
	GPIO	8-bit							
Watchdog Timer	Output	System reset							
	Interval	Programmable 1-255 sec							
Miscellaneous	Audio	Intel High Definition audio interface (required an audio extension module P/N: PCA-AUDIO-HDA1E)							
Power Requirement	Test Environment	Core i7-4770S DDR3 1600 8GB x 2							
	Voltage	+12V	+5V	+3.3V	+5Vsb	-12V	-5V		
	Current	4.02A	1.36A	0.81A	0.09A	0A	0A		
Environment		Operating				Non-operating			
	Temperature/Humidity	0 ~ 60 °C (32~140 °F); Depends on CPU frequency and cooler solution Operating humidity: 40 °C @ 85% RH Non-Condensing				-40 ~ 85 °C and 60 °C @ 95% RH Non-Condensing			
Physical	Dimensions (L x H)	338 x 122 mm (13.3" x 4.8")							

Ihr NI-Partner:
AMC – Analytik & Messtechnik GmbH Chemnitz
Heinrich-Lorenz-Str. 55 Tel.: +49/371/38388-0
09120 Chemnitz Fax: +49/371/38388-99
E-Mail: info@amc-systeme.de Web: www.amc-systeme.de

Block Diagram

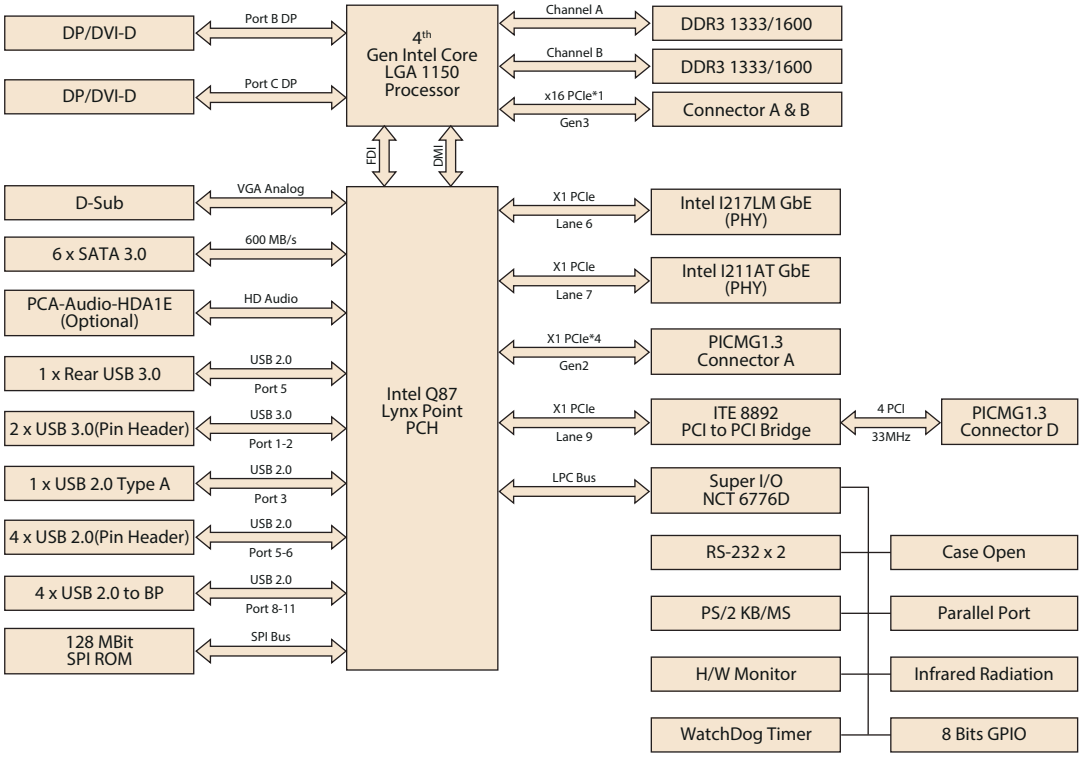

Ordering Information

Part Number	PCH	Memory	Backplane	LAN	VGA	DP/ DVI-D	COM	SATA III	USB 2.0	USB 3.0	S/W Raid	AMT
PCE-5128G2-00A2E	Q87	Non-ECC	PCE-5BXX	2	Yes	2*	2	6	10	3	Yes	Yes

Note: Both DP and DVI-D cable are optional.

Packing List

Part Number	Description	Quantity
1700003194	Serial ATA HDD data cable	x2
1700022749-11	Serial ATA HDD power cable	x1
1701260305	COM + printer ports cable kit	x1
1700060202	Keyboard and mouse Y-cable	x1
1700008461	4-port USB cable kit	x1
9689000068	Jumper package	x1
2190000902	Warranty Card	x1
2006512800	Startup manual	x1
2066512802	Utility CD	x1

Optional Accessories

Part Number	Description
1960049408N001	CPU Cooler for 1U Chassis and 84W TDP
1960047831N001/ 1960077101N001	CPU Cooler for 2U Chassis and 95W TDP
PCA-AUDIO-HDA1E	Audio module
PCA-TPM-00A1E	TPM module(Trust Platform management)
PCA-COM232-00A1E	4 Ports RS-232 Module by LPC
PCA-COM485-00A1E	4 Ports RS-485/422 Module by LPC
1700020277-01	2 ports USB 3.0 cable W/ BKT(30cm)
1700021831-01	DP to DVI-D cable w/ BKT
PCE-DP10-00A1E	DP to DP cable w/ BKT

I/O View

PCE-5128G2-00A2E

Irrtum und Änderungen vorbehalten – auch ohne vorherige Ankündigung. Verwendete Hardware- und Softwarebezeichnungen, Marken sowie Firmennamen können eingetragene Warenzeichen sein und unterliegen somit den gesetzlichen Bestimmungen. / Information in this document is subject to change without prior notice. The software and hardware designations or brand names used in this text are in most cases trademarks or registered trademarks of their respective companies and are thus subject to law.