PCM-27D24DI

24-Channels Isolated Digital I/O with counter mPCIe, DB37

Features

- Meets Advantech Standard iDoor Technology
- PCI Express® Mini Card Specification Revision 1.2 compliant
- Supports wide-input/output voltage (10-30 V_{DC}/5-30 V_{DC})
- High over-voltage-protection (70 V_{DC}) and voltage isolation (2,500 V_{DC})
- Easy configuration & efficient programming by Advantech DAQNavi
- I/O address automatically assigned by PCIe plug & play
- Keeps the output settings and values after system hot reset
- Supports Embedded Automation Computers UNO-2200/2300/2400 series
- Supports Embedded DIN-Rail Controller UNO-1200/1300/1400 series
- Supports Embedded BOX IPC UNO-3000 series
- Supports Embedded Automation Panel Computers TPC-xx82/xx72/xx80 series

Vertrieb durch AMC
AMC – Analytik & Messtechnik GmbH Chemnitz
Heinrich-Lorenz-Str. 55 Tel.: +49/371/38388-0
09120 Chemnitz Fax: +49/371/38388-99
E-Mail: info@amc-systeme.de Web: www.amc-systeme.de

Introduction

The PCM-27 series are categorized as digital input/output modules from Advantech iDoor Technology. They are all compatible with the PCI Express® Mini Card Specification Revision 1.2. including Isolated / Non-Isolated RS-232/422/485 communication cards for automation control, Wi-Fi/3G/GPS/GSM/LTE wireless communication models for data exchange during the management and machine level of automation application, Zigbee module as an IoT terminal or controller and PoE function for smart camera in detect inspection application of production. This is a flexible design that enables customers to customize their features which meet iDoor Technology.

Specifications

General

- **Bus Type** PCI Express Mini Card Revision 1.2
- **Certification** CE, FCC class A
- **Connectors** 1 x Female DB37
- **Dimensions** Module: 51 x 30 x 12.4mm (2" x 1.18" x 0.49")
  I/O Plate: 81 x 19.4 x 41mm (3.19" x 0.76" x 1.61")
- **Power Consumption** Typical : +3.3 V @ 400 mA
  Max. : +3.3V @ 520mA

Isolated Digital Input

- **Input Channels** 16
- **Input Voltage (Wet Contact)** Logic 0: 0~3 V_{DC}
  Logic 1: 10~30 V_{DC}
- **Input Voltage (Dry Contact)** Logic 0: Open
  Logic 1: Shorted to GND
- **Input Current** 10 V_{DC} @ 2.97 mA
  20 V_{DC} @ 6.35 mA
  30 V_{DC} @ 9.73 mA
- **Input Resistance** 5k Ohm
- **Interrupt Capable Channels** 2 (IDI0, IDI8)
- **Isolation Protection** 2,500 V_{DC}
- **Overvoltage Protection** 70 V_{DC}
- **ESD Protection** 4KV (Contact), 8KV (Air)
- **Opto-Isolator Response** 50 µs

Isolated Digital Output

- **Output Channels** 8
- **Output Type** MOSFET
- **Isolation Protection** 2,500 V_{DC}
- **Output Voltage** 5 ~ 30 V_{DC}
- **Sink Current** 100 mA max./channel
- **Opto-isolator Response** 50 µs

Counter

- **Channels** 2
- **Resolution** 32bit
- **Max. Input Frequency** 1 kHz

Software

- **Tools & Drivers** Advantech DAQNavi Tools & API Drivers
- **OS Support** Microsoft® Windows® XP/7, Win 8

Environment

- **Humidity (Operating)** 5-95% RH, non-condensing
- **Operating Temperature** - 20 ~ 60°C (-4 ~ 140°F)
- **Storage Temperature** - 40 ~ 85°C (-40 ~ 185°F)

Dimensions

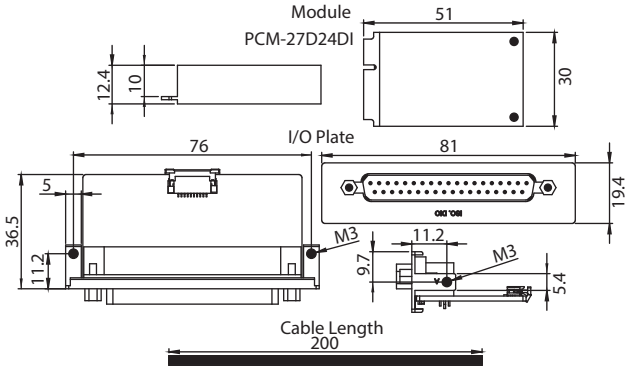

Ordering Information

- **PCM-27D24DI-AE** Digital I/O, 16 DI / 8 DO, Isolation, DB37 x 1

Accessories

- **PCL-10137-1E** DB-37 Shielded Cable, 1m
- **PCL-10137-2E** DB-37 Shielded Cable, 2m
- **PCL-10137-3E** DB-37 Shielded Cable, 3m
- **ADAM-3937-BE** DB-37 Wiring Terminal, DIN-rail Mount

Irrtum und Änderungen vorbehalten – auch ohne vorherige Ankündigung. Verwendete Hardware- und Softwarebezeichnungen, Marken sowie Firmennamen können eingetragene Warenzeichen sein und unterliegen somit den gesetzlichen Bestimmungen. / Information in this document is subject to change without prior notice. The software and hardware designations or brand names used in this text are in most cases trademarks or registered trademarks of their respective companies and are thus subject to law.