TREK-520

RISC Compact In-vehicle Computing Box for Fleet Management

Features

- TI Cortex-A8 AM37X Series SOC
- Support WinCE 6.0 & Embedded Linux (by project-based)
- Vehicle diagnostic interface with configurable protocols support: CAN (J1939, OBD-II/ISO-15765) and J1708 (J1587)
- Built-in GNSS, WLAN, Bluetooth and WWAN
- Built-in backup battery for roadside assistance and emergency (by project-based)
- Intelligent Vehicle Power Management: Ignition on/off delay, wake up event controls and system health monitoring and diagnostic (*3)
- Wide working temperature, 12/24V Car power system compliant (ISO 7637-2) and Anti-shock/vibration (MIL-STD-810G & 5M3)
- IP54 available with IP protection box

Vertrieb durch AMC
AMC – Analytik & Messtechnik GmbH Chemnitz
Heinrich-Lorenz-Str. 55 Tel.: +49/371/38388-0
09120 Chemnitz Fax: +49/371/38388-99
E-Mail: info@amc-systeme.de Web: www.amc-systeme.de

Introduction

TREK-520 is a RISC box Mobile Data Terminal (MDT). The radio frequency options and low power consumption make TREK-520 suitable for local fleet management, especially small trucks, local deliveries, government fleets and taxis. TREK-520 can operate in harsh environments and functions in extreme temperatures (-30° C ~ 70° C) using fluctuating car power and resists shock and vibration. With a suspend/wakeup feature, TREK-520 supports a 24/7 monitoring mechanism with periodical, digital input & WWAN wakeup (*3).

Specifications

Core	Processor	TI Cortex-A8 AM3703 (Single Core, 800MHz); AM3715 (Single Core, 1GHz) by project-based
	Memory	512MB LPDDR on board; 1GB LPDDR by project-based
	Graphic	POWERVR SGX™ Graphics Accelerator of OpenGLES 1.1/2.0, OpenVG1.0 by project-based
	O.S	WinCE 6.0 R3 core version; Linux V2.6.37 by project-based
Storage	SD Card	1 x internal non-accessible 4GB SD, support system boot up 1 x external accessible push-push type SD slot
Display	Smart Display Port (*2)	12V/1A power output for TREK-303 1 x 18-bits LVDS (Resolution: 800 x 480) 1 x Line-Out (*1) (For Speakers on TREK-30X) 2 x UART (TX/RX) (For T/S, Hot keys, brightness, light sensor control) 1 x USB 2.0 Type A 1 x PWR Button Signal 1 x Reset Button Signal
Sensor	G-Sensor	3-Axis ±2/±4/±8/±16 g
I/O	Reset Button	1 x Reset button
	Vehicle I/O Port	2 x CAN Bus (Support Raw CAN, J1939, OBD-II/ISO 15765; F/W configurable) 1 x J1708 (Support J1587) 2 x Isolated DI (Dry contact) 2 x Isolated DO (Open collector output, driving by replay)
	Standard I/O Port	1 x USB Client Mini-B 1 x USB 2.0 Host Type A 1 x SIM Card Slot 1 x High Speed Full RS-232, (Optional DB-9 Pin 9 with 12V/1A)
	Audio Jack	1 x MIC/Mono Line In 1 x Stereo Line Out
	LED	4 x LEDs (Power (Red), WLAN/BT (Green), WWAN (Green), GPS (Blue))
RF	WLAN + Bluetooth	IEEE 802.11 b/g/n + Bluetooth V2.1+EDR on board
	WWAN	HSPA+/UMTS, GSM/GPRS/EDGE: Telit HE-910D via mini PCIe slot CDMA, EV-DO: Telit DE-910 via mini PCIe slot
	GNSS	Build-in GlobalSat EB-5662RE module on board
	Antenna	3 x SMA type antenna hole for GPS/ WWAN/ WLAN+BT
Power	Voltage input	Supports 12/24 V car power system. (ISO 7637-2 & SAE J1113 compliant.) 6V ~ 32V DC input without backup battery; 12V ~ 32V DC input with backup battery by project-based
	Intelligent Vehicle Power Management (iVPM 1.0)	System power on/off/suspend management (e.g. Programmable Ignition On/Off Time delay) Support Wake up Events: - Alarm (RTC) Wake up. - Wake up by Call/SMS. System power protection System healthy monitoring and diagnostic (e.g. Programmable Car_Battery _Low Protection)
	Backup battery	7.4V 2000mAH Li-ion battery by project-based

*1: Support single audio stream only. (i.e. The Line-Out interface in "Smart Display Port" and "Audio Jack" share the same audio path).
*2: Default is ok for TREK-303; TREK-306 (1024x768) by project-based.

Vertrieb durch AMC

AMC – Analytik & Messtechnik GmbH Chemnitz

Heinrich-Lorenz-Str. 55 Tel.: +49/371/38388-0
09120 Chemnitz Fax: +49/371/38388-99
E-Mail: info@amc-systeme.de Web: www.amc-systeme.de

Dimensions

Unit: mm

TREK-520

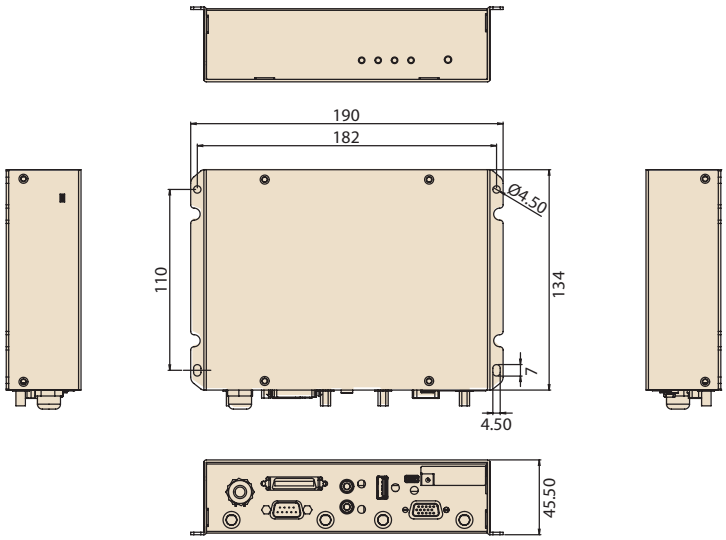

IP protection box (by project-based)

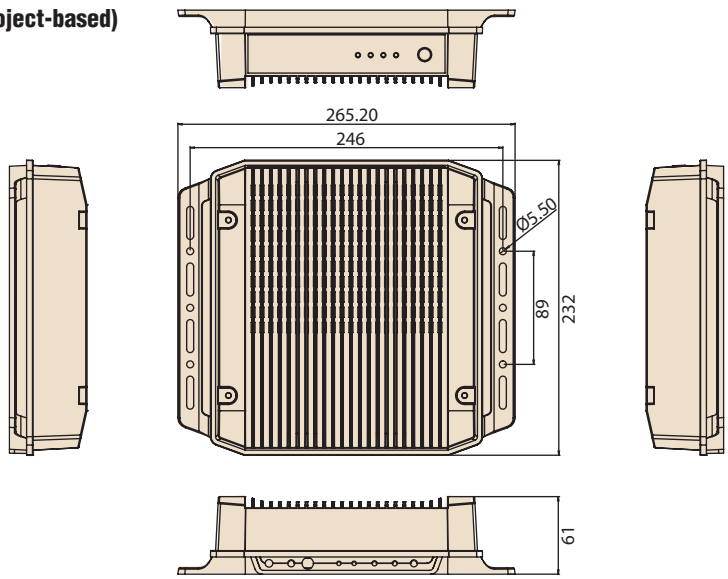

Specifications Cont.

Mechanical	Dimensions (W x H x D)	Metal chassis: 190 x 45.5 x 134 mm IP protection box: 265.20 x 61 x 232 mm
	Weight	Metal chassis: 900 grams IP protection box: 1.2 kg
Environment	IP Rating	IP54 (with IP protection box)
	Vibration/Shock	MIL-STD-810G, EN60721-3(5M3)
	EMC	CE, FCC, CCC
	Safety	UL/cUL, CB
	Vehicle Regulation	E-Mark (E13) (12V/24V system), SAE J1455, ISO 7637-2, SAE J1113
	RF Regulation	CE (R&TTE), FCC ID
	Operating Temperature	-30° C ~ 70° C
	Storage Temperature	-40° C ~ 85° C

Ordering Information

Part Number	Description
TREK-520-CWBCEB0E	TREK-520 w/CDMA/GPS/WLAN/BT/4G SD/CE6
TREK-520-HWBCEA0E	TREK-520 w/HSPA+/GPS/WLAN/BT/4G SD/CE6

Optional Items

Part Number	Description
1700021847-01	M Cable D-SUB 15P(M)/D-SUB 9P(M)*3+D-SUB 15P 2M
9666074302E	19V adapter for TREK-743 test purposes

Irrtum und Änderungen vorbehalten – auch ohne vorherige Ankündigung. Verwendete Hardware- und Softwarebezeichnungen, Marken sowie Firmennamen können eingetragene Warenzeichen sein und unterliegen somit den gesetzlichen Bestimmungen. / Information in this document is subject to change without prior notice. The software and hardware designations or brand names used in this text are in most cases trademarks or registered trademarks of their respective companies and are thus subject to law.